ERICH OTT

EX SIPT L

Safety temperature limiter with power controller

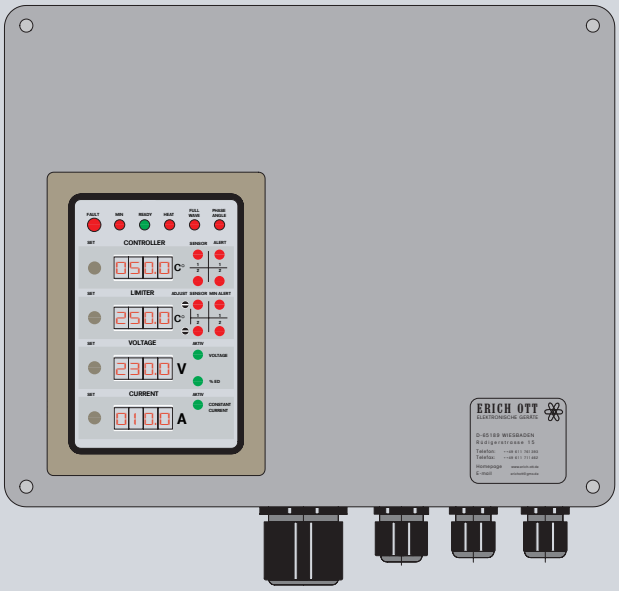

Identification (planned)	Ex I 2G Ex e [ib] ib mb IIC Gb T4 I 2D Ex [ibD] ibD tDA21 IP6x Gb T135°C
EC-type examination certificate	**(in progress)**
Ambient temperature range	**-40°C - +55°C**
Nominal current	**30 A**
Control range	**0 °C - 500 °C**
Nominal voltage	**230 V**
Voltage adjustment	**30 V - 400V**
Monitoring	**2 or 3 conductor**
Protection class	**IP65**
SIL level	**2** (planned)
Ex Zone	**1** (planned) **available 2**

Ex - ib safety temperature limiter with power controller and digital display

The complete solution for trace heatings. SIPT L serves temperature control, limitation and power control including bus control or fault signal in one device. All functional units are integrated in an antistatic standard casing with inspection window.

Cost-effective in maintenance and repair due to modular design.

Devices and protective systems for the intended use in potentially explosive atmospheres according to guideline 2014/34/EU (ATEX)

Power controller	EX SIPT L . . . .

Erich Ott GmbH & Co. KG
Partner für den Ex-Bereich

D-65189 Wiesbaden
Rüdigerstrasse 15

Telephone +49 (0) 611 - 761 393
Telefax +49 (0) 611 - 711 462

mail info@erich-ott.de
web www.erich-ott.de

TABLE OF CONTENTS

1.0 General description 2
1.1 Fault signalling relay 2
2.0 General technical data 3
2.1 Technical data controller 3
2.2 Technical data voltage controller 3
2.3 Technical data of the semi-conductor circuit 3
2.4 Technical data limiter 3
2.5 Technical data min. monitoring 3
3.0 Production number 4
3.1 Type code 4
3.2 General view of all available combinations 4
4.0 Connection diagrams 4
5.0 Setup 5
5.1 Adjustment of the setpoint values 5
5.2 Front panel 6
5.3 Functions and signallings on the front panel 6
5.4 Error reports 7
6.0 Measuring sensor 7
7.0 Type plate 7
8.0 Dimensions 8

Warning
The installation, configuration and commissioning may only be carried out by accordingly trained persons. On-site installation and safety requirements must be met.

Proviso
Technical changes are reserved. Changes, errors and printing errors do not justify any claim for compensation. For safety components and systems the relevant standards and regulations and the according operating and installation instructions must be observed.

Installation notes
The safety related data of the circuits to be connected must accord with the technical data or rather the determinations of the EC-type examination certificate.
For the installation / operation the EN 60079-14, if applicable the standard series EN 60079-30, bzw. EN 62086-1 and EN 62086-2 and the respectively prevailig installation regulations as well as this operating manual must be observed. The devices may mechanically not be loaded more than it is intended by the standards and the including examinations. If a deformation is recognisable at the device, it must be sent back for examination.
If during the installation difficulties occur even though, please do not carry out any unauthorized manipulations at the device. Otherwise the warranty and the validity of the EC-type examination certificate void. Please contact us. In the case of service the device must be returned to us.
Please pay attention to the connection diagrams on page 4 point 4.0

Repair
Due to the modular design it is possible, to repair individual components. The device must be returned to the manufacturer for examination and proposal preparation. A repair is always to be preferred to a disposal and may only be carried out by the manufacturer.

Special conditions
The power controller SIPT must be protected with ≤30 A.

Notes on installation and operation
Before the device is taken into operation, the installation must be checked without device. An interchange of connections may lead to immediate destruction of the device.
The „technical data" of this operating manual for the power controller SIPT must be complied with.
The operation of the device without load in series connection and if this does not have the minimum resistance or more, is impermissible.
The interconnection of individual certified components to one heating corresponds to a new unit with new, above all thermal, ignition hazards.
Dismounting takes place in reverse order than the installation.

Maintenance
The applicable regulations for repair / maintenance / inspection of the EN 60079-14, EN 60079-11, if valid and applicable standard series EN 60079-30, or rather EN 62086-1 as well as EN 62086-2 must be observed. The equipment is maintenance-free.

Read through these operating instructions before you take the device into operation. Keep this operating manual at a place accessible for all users at any time.
Please support us to improve this operating manual.
We are grateful for your suggestions.

Please contact us for technical queries!
TELEPHONE: +49 (0)611 761 393
TELEFAX: +49 (0)611 711 462
E-Mail: info@erich-ott.de

1.0 GENERAL DESCRIPTION

Characteristics

- STB in accordance with SIL 2 for zone 1
- Digital display values for temperature actual values of controller and limiter
  Voltage and current values
- Signal LED
- Upt to 4 measuring sensor inputs
- Parameterization via key control
- Easy installation
- Trouble report of controller and limter
- Sensor cable monitoring of all 3 cores
- Low intrinsic heating
- Phase angle control / Full wave operation

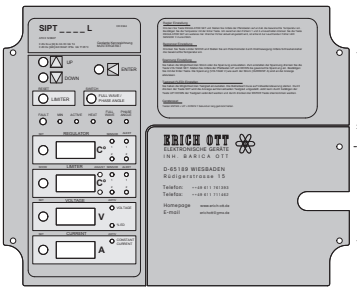

The Ex SIPT L provides up to four intrinsically safe Pt 100 inputs. Connected can be suitable temperature sensors, which can be operated in the potentially explosive atmosphere. The measuring sensor inputs are seperately laid out for controller and limiter and independant.
Appropriate certified PT 100 measuring sensors can be found in our range of products. Please take further details from the product literature
Ex Pt 100 Ks or Ex Pt 100 L. All other Pt 100 sensors, which are certified according to ATEX (Ex-I) can also be used.
The Ex SIPT L can be configurated with the buttons on the front panel.
The complete control of the operating conditions and all functions can be read off the front panel.
The Ex SIPT L has in its standard version a temperature controller with a control range of 0-500°C, voltage controller with a control range of 30-400 Volt AC, a limiter with a temperature range of 0-500°C, a fault signal LED and a potential-free contact, which can be implied for monitoring purpose in the quality management.
[1]The device has a constant current output of 4 mA – 20 mA (with a temperature range of -50°C to 500°C.)
[2]A remote control input (Remote off) can be operated for example from a SPS.
In full-wave operation the duty cycle can be adjusted from 10 to 100% ED.
The measuring circuit is carried out intrinsically safe. (EN 60079-11)
BUS - interface for the control and maintenance in the control room, instead of the remote control input.
The high protection class makes the use under extreme conditions possible. A functional impairment by condensation in the terminal box is not present.

[1] For the controller-actual value. 0-500°C

[2] 24 V DC not intrinsically safe

Function

Control

The Ex SIPT L is designed as on/off controller and measures the temperature via an intrinsically safe PT 100 sensor in 3-wire technique., which is connected in the cabinet or at the intrinsically safe terminals. Depending on the temperature at the measuring sensor and the value adjusted as setpoint value, the Ex SIPT L controls the temperature. The actual value is displayed on a 3-digit seven-segment display (REGULATOR).

Overheat limitation (SIL)

The acquisition of the limit temperature is carried out by use of an intrinsically safe Pt 100 sensor in 3-wire technique, which is connected in the cabinet at the intrinsically safe terminals. To ensure that the temperature is recorded at the warmest point, the sensor must be installed at the correct reference point.
If the temperature exceeds the pre-adjusted limit value or if an error occurs (sensor break, short-circuit), the built-in relay interrupts the installation into a safe operational state. At the same time a fault-signalling is displayed. The shutdown remains until a manual release takes place by use of the reset button at the front panel of the Ex SIPT L.
At a power failure without triggering of the alarm contact, an automatic release of the previous operating condition is given at power recovery. This saves the maintenance personnel from restarting each limiter by hand (limiter resetting).

MIN.- MONITORING (INSUFFICIENT TEMPERATURE)

With the minimum temperature monitoring a drop of the temperature under a pre-set limit value can be recorded in time to possibly remedy a disturbance before the occurance of a damage.
The adjustment of the temperature switching point results digitally by use of the key control on the front panel.
The lower deviation of the minimum temperature leads to the Min. alarm and to fault signalling.
The temperature range is identical to that of the controller circuit.

Sensor 2 wire- 3-wire technique

An interruption of one of the three sensor lines or a short-circuit of it leads to the disconnection of the load current.
The 3-wire circuit of the measurement input is by default reduced to a 2-wire circuit at the terminal block by use of a bridge for short sensor lines and can, if required, easily be changed to a 3-wire circuit (Pulling the strapping plug at the connecting terminal).
Suitable certified Pt 100 sensors are included in our delivery program. Please take further details from the product literature Pt 100 Ks or Pt 100 L.

Operation

The Ex SIPT L can be configurated by use of the buttons on the front panel. The complete control of the operating conditions and all functions can be read from the front panel.

Modular design

Due to the possibility to exchange individual modules, this device can be repaired easily and is therefore very easy to maintain, which signifies a substantial cost saving.

1.1 FAULT SIGNALLING RELAY

The fault signalling relay responds to any of the following errors (drop in neutral position):

Limiter	Controller
Limiter released	Min.-temperature undershoot
Sensor short-circuit *	Sensor short-circuit *
Sensor break *	Sensor break *
	Controller temp. < Limiter setpoint value

General
Heat conductor break
Voltage drop

* no matter which of the 3 measuring lines is concerned

2.0 GENERAL TECHNICAL DATA

Nominal voltage	230V ±10% (Operation at temporary voltage drops up to 175V ensured) 50-60 Hz
Protection class	Min. IP65 / DIN 60529
Admissible ambient temperature range	-40°C to +55°C
Dimensions	Length 280 mm Width 230 mm Height 165 mm
Weight	9,5 kg
Electrical connection	≤2,5mm² Sensor + signaling lines ≤6mm² Load current circuit
Screw joints	4x M 12 sensor 2x M 20 signals 1x M 25 load current variant 1x M 32 energy supply
Fixation	Raster 260 mm x 180 mm for 4 x M4 screws
EC-type examination certificate	ZELM12ATEX..... (available from Feb. 2012 on)
Declaration of conformity	ZELM12ATEX..... (available from Feb. 2012 on)
Used standards	EN 60079-0, EN 60079-1, EN 60079-7, EN 60079-11, EN 60079-18, EN 60079-30-1
Safety integrity level	SIL 2
Explosion protection hazard zone	Zone 1 or zone 2 and standard environment
Identification Planned identification ! Sample device without identification!	CE 0344 / Ex II 2G Ex e [ib] ib mb IIC Gb T4 II 2D Ex [ibD] ibD tDA21 IP6x Gb T135°C

2.1 TECHNICAL DATA CONTROLLER

Nominal current	100 mA (120 mA) own consumption
Hysteresis	1 - 20 °C adjustable
Insulation voltage* Inputs network Network cabinet Inputs cabinet	 2,5 kV~ 2,5 kV~ 500 V~ (* inputs short-circuited)
Sensor	Pt 100
Measuring current	1 mA, 3-wire circuit
Measuring circuit monitoring	all 3 lines
Setting range temperature	0 - 500°C (max. limiter setpoint value)
Measuring range	-50 - 550°C
Controller adjustment	digital

2.2 TECHNICAL DATA VOLTAGE CONTROLLER

Setting range voltage	30 - 400 V
Nominal current	30 A
Heating current	1A -30A (Current ‹1A- heat conductor break alarm)

2.3 TECHNICAL DATA OF THE SEMICONDUCTOR CIRCUIT

Nominal current of the semiconductor	45 A

2.4 TECHNICAL DATA LIMITER

Measuring sensor input	Sensor Pt100
Measuring current	1 mA, 3-wire switch
Measuring circuit monitoring	all 3 lines
Measuring range	-50 - 550°C
Cable breakage	> 550°C
Cable end	< – 50°C
Setting range	0 - 500°C
Limit adjuster	10 gear trimmer (manual)
Switching point accuracy	≤ 1°C
Switching hysteresis	1-3 K
Limiter relay	1 potential-free changeover contact 250/ 440 V ; 30 A ; cos φ ≥ 0,7 ; 15 KVA
Resetting	At the operation panel (button)
Series fuse	≤ 30 A

2.5 TECHNICAL DATA MIN. MONITORING

Setting range	0 - 500 °C (max. controller setpoint value)
Setpoint value adjustment	digital
Switching point accuracy	≤ 1 K
Fault siganlling	vial fault signal relay
1 potential-free make contact	250 V; 5 A cos φ 0,7; 1250 VA; 30 V=; 5 A; 150 W

3.0 PRODUCTION NUMBER

xxxx / 10.11

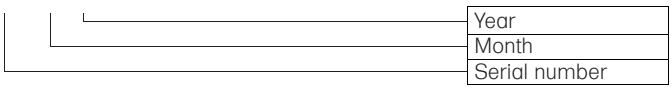

With the continuous serial number can, in the case of repair, production month and year be determined by the in-house quality management . Each individual device is item-tested and a separate insprection record is created. The serial number can always be found on the encapsulation of the voltage controller inside the device.

3.1 TYPE CODE

EX SIPT L _ 1 _ 2 _ 3 _ 4 _ 5 _ 6

1	R	1 Controller
	RR	2 Controller
2	B	1 Limiter
	BB	2 Limiter
3	-	1 Heating circuit
	2	2 Heating circuit
4	-	Without power conrol
	L	With power control (not possible with two heating circuits)
5	1	Zone 1
	2	Zone 2
6	-	Analog actual value output 4-20 mA 24V remote - off input
	1	MODBUS
	2	BUS - system please indicate when ordering

Example:
Device with 1 controller and 1 limiter. Designed for one heating circuit with power control and zone 2 with actual value output 4-20 mA.

EX SIPT L R 1 B 2 - 3 L 4 2 5 - 6

3.2 GENERAL VIEW OF ALL AVAILABLE COMBINATIONS

	Controller	Limiter	Number of heating circuits	Power control
EX SIPT L R1	1		1	
EX SIPT L R1L	1		1	1
EX SIPT L RR1	2		1	
EX SIPT L RR2	2		2	
EX SIPT L B1		1	1	
EX SIPT L BB1		2	1	
EX SIPT L BB2		2	2	
EX SIPT L RB1	1	1	1	
EX SIPT L RB1L	1	1	1	1
EX SIPT L RRB1	2	1	1	
EX SIPT L RRB1L	2	1	1	1
EX SIPT L RBB1	1	2	1	
EX SIPT L RBB1L	1	2	1	1
EX SIPT L RRBB1	2	2	1	
EX SIPT L RRBB1L	2	2	1	1
EX SIPT L RRBB2	2	2	2	

4.0 CONNECTION DIAGRAM

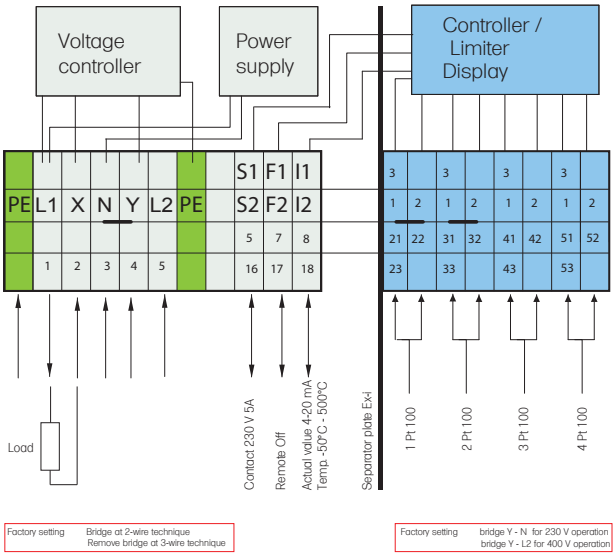

Wiring

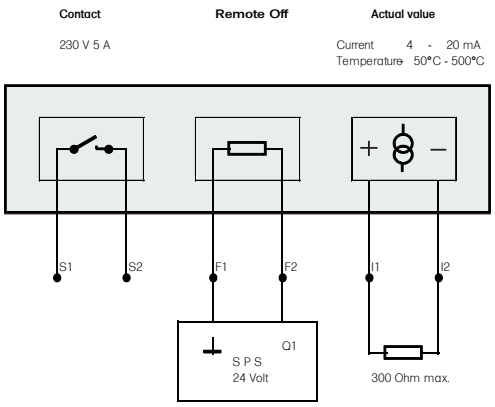

5.0 SETUP

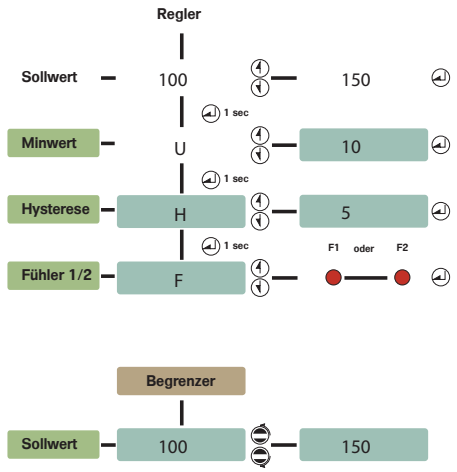

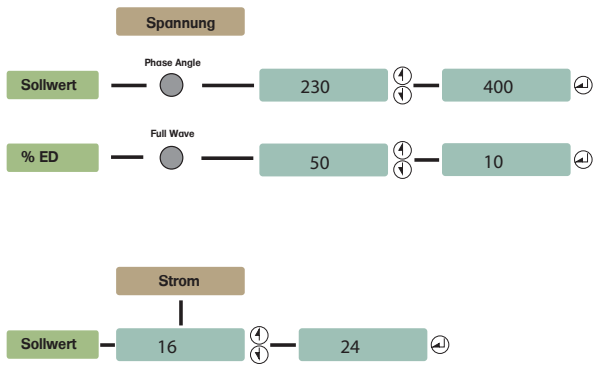

Constant Current

Step 1 :
Selection of the desired operating mode.
Phase angle control / full-wave control

Step 2:
Adjustment of the maximum voltage or rather of the maximum duty cycle for the heating circuit.
Voltage / % ED

Step 3 :
Adjustment of the desired constant current
Constant Current

5.1 ADJUSTMENT OF THE SETPOINT VALUES

Conroller adjustment
By continuous pressure of the button REGULATOR SET the display REGULATOR is triggered and the actual temperature setpoint value is indicated. With the buttons UP or DOWN the setpoint value is increased or rather lowered. The desired setpoint value must be confirmed with the button ENTER.
Then in the display appears the letter U for the designation of the mimimum value (lower value) of the temperature. Change of the temperature with the buttons UP and DOWN. Confirm with the button ENTER.

After that the letter H like hysteresis is indicated. Change agein with UP and DOWN buttons. Confirm with ENTER.
The last setting can be chosen between the option (sensor 1) or (sensor 1 and sensor 2).
By pushing ENTER the entry in this menu item is exited.
By pushing ENTER twice a menu item can be skipped.
For example:
After the confirmed input of the temperature setpoint value one can change to the hysteresis adjustment by pushing the ENTER button twice.

Limiter adjustment
By pushing the button LIMITER SHOW and adjusting the upper potentiometer with a small screw driver, the desired limiter temperature for the limiter 1 is adjusted. The potentiometer below is assigned for the limiter 2 (option).

Voltage adjustment
For the adjustment of the voltage the button VOLTAGE SET must be pushed. The desired voltaage can be chosen with the UP and DOWN buttons and confirmed with ENTER.
The adjusted voltage is shown in the display VOLTAGE and with the LED VOLTAGE the display mode is shown.
Another presentation in this display is the indication of the duty cycle in %ED during the operation type full-wave control. The desired duty cycle can be chosen with the buttons UP and DOWN and confirmed with ENTER. The adjusted duty cycle is shown in the display VOLTAGE and signalled with the LED %ED.

Current setting
Analog to the voltage adjustment, the current is ajdusted by pushing the button CURRENT SET. The desired current can be chosen with the buttons UP and DOWN and confirmed with the ENTER button. The adjusted current is shown in the display CURRENT.

For the operation with constant current in the first step the type of operation FULLWAVE or PHASE ANGLE is chosen with the button SWITCH.
The second step is to determine the maximum voltage VOLTAGE or rather the maximum duty cycle %ED for the heating circuit.
With the third step the constant current is adjusted. It is shown in the display CURRENT in combination with the LED CONSTANT CURRENT.

5.2 FRONT PANEL

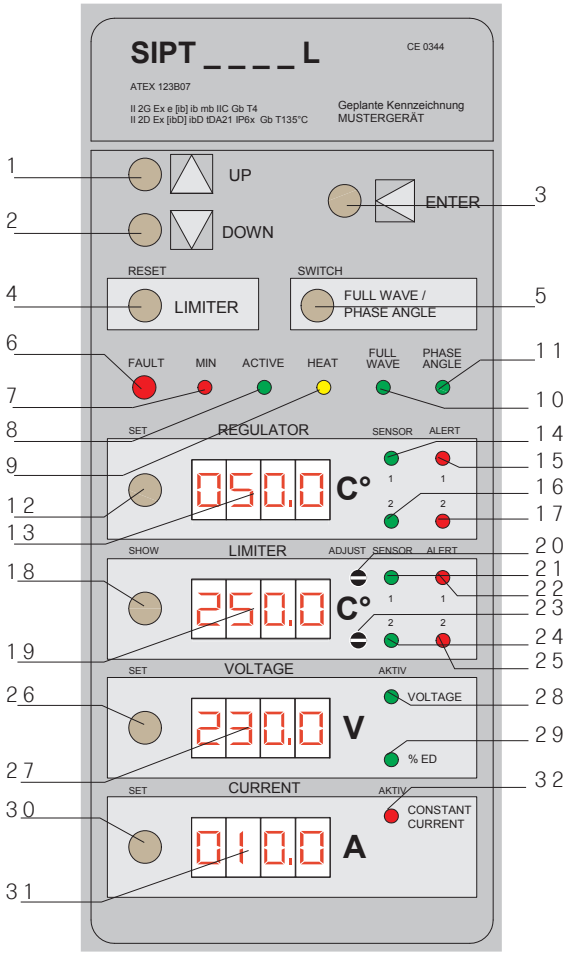

5.3 FUNCTIONS AND SIGNALLINGS ON THE FRONT PANEL

Pos. Nr.	Front plate text	LED colour	Remark	Type of signal	Signal, Display, significance
1	UP	--	Button	Push	Value increases
2	DOWN	--	Button	Push	Value decreases
3	ENTER	--	Button	Push	Confirm input /display modechanges
4	RESET LIMITER	--	Button	Push	
5	SWITCH FULL WAVE / PHASE ANGLE	--	Button	Push	
6	LED FAULT	Red	Fault signalling	Constantly	Fault error report
				Flashing	LImiter resetting necessary
7	LED MIN	Red	Dropping below the minimum temperature	Constantly	Min.alarm
8	LED ACTIVE	Green	Operation display	Flashing	Processor is active
				Off	Device off or voltage missing
9	LED HEAT	Yellow	Heating On- Off signalling	On	Heating on
				Off	Heating off
				Flashing	
10	LED FULLWAVE	Green	Full-wave operation	On	Full-wave control in operation
				Off	For phase-angle
11	LED PHASE ANGLE	Green	Phase angle operation	On	Phase-angle control in operation
				Off	For full-wave operation
12	SET REGULATOR	--	Button	Push	
13	DISPLAY REGULATOR	Green	Controller seven segment display	Constantly	Set-point temperature
				Flashing + SET REGULATOR	Change of values
				Flasing + dezimal points + Alert Sensor 1 or Sensor 2	Controller setpoint value 1 or 2 larger than limiter setpoint value(s)
14	SENSOR REGLUATOR 1	Green	Controller sensor 1 on display	Constantly	Sensor 1 active (Display)
				Flashing	For sensor selection
15	ALERT REGULATOR 1	Red	Alerting of controller sensor 1	Constantly	Sensor alarm
16	SENSOR REGULATOR 2	Green	Controller sensor 2 on display	Constantly	Sensor 1 active (Display)
				Flashing	For sensor selection
17	ALERT REGULATOR 2	Red	Alerting of Controller sensor 2	Constantly	Sensor alarm
18	SHOW LIMITER	--	Button	Push	Indicates setpoint value
19	DISPLAY LIMITER	Red	Limiter seven segment display	Consantly	Limiter 1 or 2 alter-nating display of the setpoint temperature
				Flashing + SET LIMITER	Change of values
20	ADJUST LIMITER 1	--	Potentiometer adjustment	Rotate	
21	SENSOR LIMITER 1	Green	Limiter sensor 1 on display	Constantly	Sensor1 active
				Flashing	For sensor selection
22	ALERT LIMITER 1	Red	Alerting of limiter sensor 1	Constantly	Overtemperature at limiter 1
				Flashing	Limiter 1 resettable
23	ADJUST LIMITER 2	--	Potentiometer adjustment	Rotate	
24	SENSOR LIMITER 2	Green	LImiter sensor 2 on display	Constantly	Sensor 2 active
				Flashing	For sensor selection
25	ALERT LIMITER 2	Red	Alerting of limiter sensor 2	Constantly	Overtemperature at limiter 2
				Flashing	Limiter 2 resettable
26	SET VOLTAGE	--	Button	Puhs	
27	DISPLAY VOLTAGE	Green	Voltage seven segment display	Constantly	Setpoint value operating voltage
				Flashing	+SET VOLTAGE Change of values
28	VOLTAGE ACTIVE	Green	Display voltage mode	On	
29	%ED ACTIVE	Green	Display % duty cycle	On	
30	SET CURRENT	--	Button	Push	
31	DISPLAY CURRENT	Red	Current seven segment display	Constantly	Current actual value
32	CONSTANT CURRENT	Red	Constant current opera-ting mode	On	

5.4 ERROR REPORTS

Display Regulator

Error report	Annotation
F 00	Contact manufacturer *
F 01	Conductor fault sensor 1
F 02	Conductor break sensor 1
F 03	Conductor fault sensor 2
F 04	Conductor break sensor 2
F 05	
F 06	
F 07	

Display Limiter

Error report	Annotation
F 00	Contact manufacturer *
F 01	Conductor fault sensor 1
F 02	Conductor break sensor 1
F 03	Conductor fault sensor 2
F 04	Conductor break sensor 2
F 05	
F 06	Internal error
F 07	Internal error

* put in manufacturer contact data Tel. Fax e.mail

See F00

Display Voltage

Error report	Annotation
F 00	
F 01	
F 02	
F 03	F00 – F07 In the process of planning
F 04	
F 05	
F 06	
F 07	

Display Current

Error report	Annotation
F 00	
F 01	
F 02	
F 03	F00 – F07 In Planung
F 04	
F 05	
F 06	
F 07	

6.0 MEASURING SENSOR

An interruption of one of the three sensor cables or a short circuit of it leads to shut-off of the loadcurrent.
The 3-wire circuit of the measuring input is as standard reduced to a 2-wire circuit at the terminal strip for short sensor lines by use of a bridge and can, if necessary, easily be changed to a 3-wire circuit (Pull the strapping plug at the connecting terminal).
The SIPT L provides 4 Pt100 inputs in 3-wire technology, at which suitable sensors can be operated in potentially explosive atmospheres. The measuring sensor inputs are laid out seperately for controller and limiter and independant. We supply suitable, certified Pt 100 meansuring sensors in two basic versions:

Type Ex TF Pt100L as contact sensor with minimum dimensions of 7,4 cm x 2,1 cm x 2,1 cm. Fully encapsulated in an aluminium enclosure with a measuring temperature of up to 200°C.

Type Ex TF Pt100Ks with a measuring sensor tip 5 mm and a length of 23 cm. Fully encapsulated in an aluminium enclosure, a stainless steel measuring sensor tip and a measuring temperature of up to 400°C.

Pt-100 measuring sensors are part of the EMV examination. Both measuring sensors are especially secure from interference voltage. Please take further details from our product literature Pt-100Ks or Pt-100L.
Download on www.erich-ott.de

7.0 TYPE PLATE

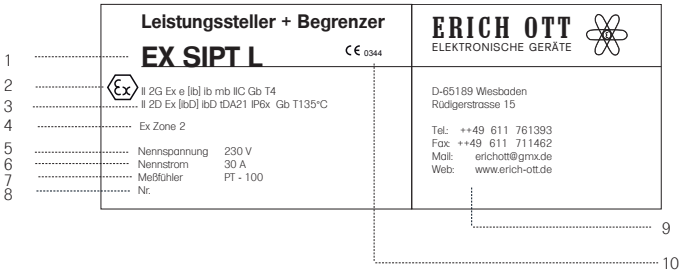

1-	Type designation	6-	Nominal current
2-	Ex- identification	7-	Measuring sensor
3-	Ignition protection category	8-	Production number
4-	Field of application	9-	Manufacturer
5-	Nominal voltage	10-	Supervising agency

8.0 DIMENSIONS

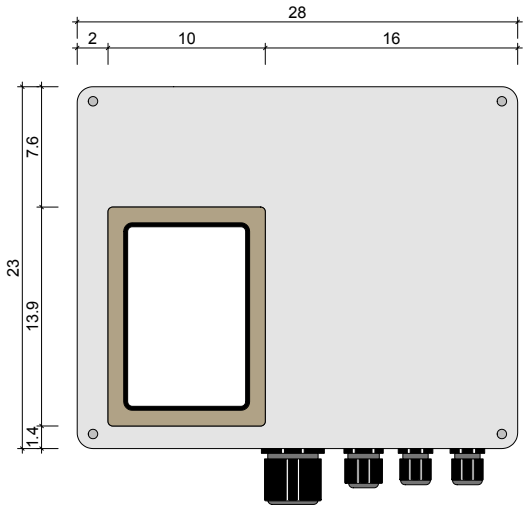

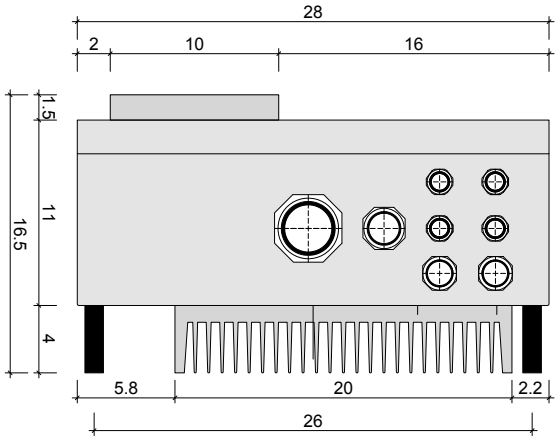

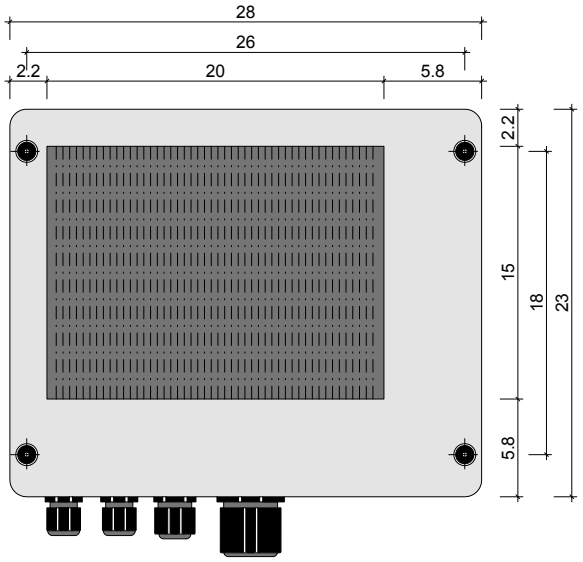

www.erich-ott.de

ERICH OTT

Erich Ott GmbH & Co. KG
Partner für den Ex-Bereich

D- 65189 Wiesbaden
Rüdigerstrasse 15
Telephone +49 (0) 611 - 76 13 93
Telefax +49 (0) 611 - 71 14 62

mail info@erich-ott.de
web www.erich-ott.de

SIPT L-01-E-260417